GL Sciences

Low Pressure & High Theoretical Plate Numbers
HPLC Column

Inertsil® ODS-3 4 μm

We synthesize & manufacture from the silica-gel!

Although the use of 3um columns are increasing, we can confirm that the market is not expanding since there are many users concerned about the high pressure to the column.

Our new **Inertsil ODS-3 4um column** guarantees a theoretical plate number more than 100,000/m, providing the lowest pressure at the same time. We strongly recommend for customers who feels uneasy using a 3um column.

Low Pressure!!! ⇒ ***1/2 of pressure compared to a 3um column***

High Theoretical Plates!!! ⇒ ***15% increase of theoretical plates compared to a 5um column***

Performance comparison between various particle sizes

Column: *Inertsil ODS-3 4um 250 x 4.6 mmI.D.*
Mobile Phase: *CH_3CN / H_2O = 65 / 35*
Flow Rate: *1.0 mL / min*
Colum Temp.: *40C*

1) Acetophenone
2) Benzene
3) Toluene
4) Naphthalene

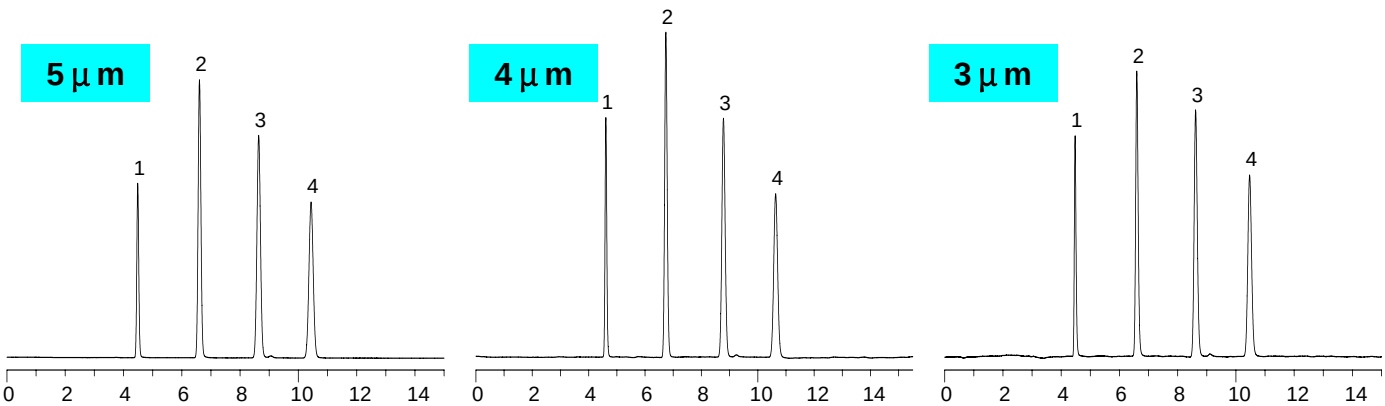

5 μm		4 μm		3 μm
Pressure: 4.7 Mpa	>	**Pressure: 6.8 Mpa**	>	**Pressure: 13.8 Mpa**
Theoretical Plates: 23,512	<	**Theoretical Plates: 27,206**	<	**Theoretical Plates: 30,484**

GL Sciences

Low Pressure & High Theoretical Plate Numbers
HPLC Column

Inertsil® ODS-3 4 μm

Low Pressure

- *1/2 of pressure compared to a 3um column*

Inertsil ODS-3 4um 250mm = 7 Mpa (70kgf)

⇨ *Nearly equivalent to competitor's ODS 5um column !*

For example,
- L Column 5um = 6.5 Mpa
- TSK 80T 5um = 9 Mpa
- YMC 5um = 9 Mpa

Low Pressure Inertsil ODS-3 columns

Inertsil ODS-3 3um = 12.0 ~ 14.0 MPa
Inertsil ODS-3 4um = 6.5 ~ 7.5 MPa
Inertsil ODS-3 5um = 4.4 ~ 5.0 MPa

Comparison of column pressure

Inertsil ODS-3 vs. commercially available other suppliers columns

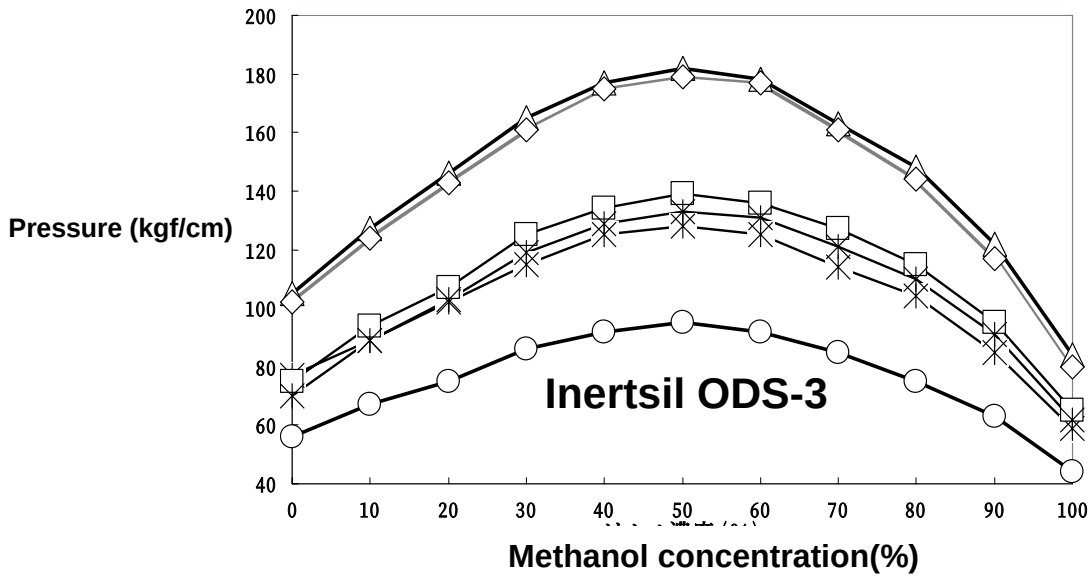

GL Sciences

Low Pressure & High Theoretical Plate Numbers
HPLC Column

Inertsil® ODS-3 4 μm

High Theoretical Plates

- *15% increase of theoretical plates compared to a 5um column*
- *Perfect for improving the separation efficiency*
- *Increasing the quantification efficiency*

We guarantee the following theoretical plate numbers for each particle sizes mentioned below

Inertsil ODS-3 3um = 29,000 (250mm)
Inertsil ODS-3 4um = 25,000 (250mm)
Inertsil ODS-3 5um = 22,000 (250mm)

Longer Column Life Time

- *Less column clogging problems*

0.5um Filter is used for a 3um column
→ Depending on the sample matrix, the column gets clogged.

2.0um Filter is used for a 4um column
→ A same filter size as a 5um column.

Save More Cost

- *The column life time is equivalent to a 5um column*
- *Better separation efficiency*
- *Nearly equal to a 5um column price*

GL Sciences

Low Pressure & High Theoretical Plate Numbers HPLC Column

Inertsil® ODS-3 4 µm

Performance comparison between various particle sizes

Column:	*Inertsil ODS-3 4um 250 x 4.6 mmI.D.*	*1) Acetophenone*
Mobile Phase:	*CH_3CN / H_2O = 65 / 35*	*2) Benzene*
Flow Rate:	*1.0 mL / min*	*3) Toluene*
Colum Temp.:	*40C*	*4) Naphthalene*

5 µm

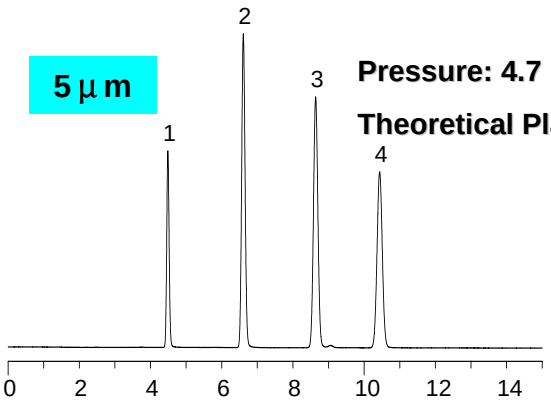

Pressure: 4.7 Mpa

Theoretical Plates: 23,512

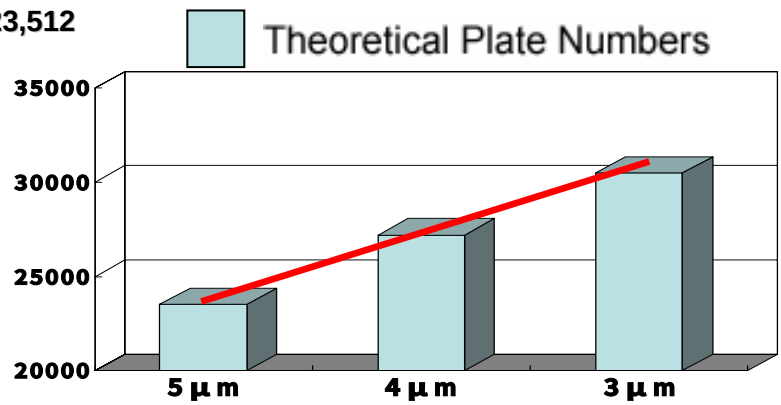

The theoretical plates are proportional to the particle sizes

4 µm

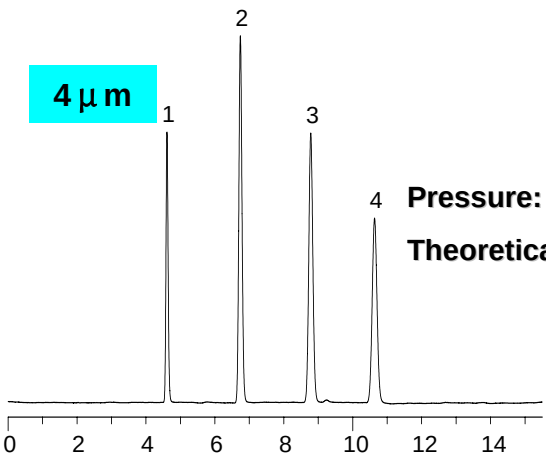

Pressure: 6.8 Mpa

Theoretical Plates: 27,206

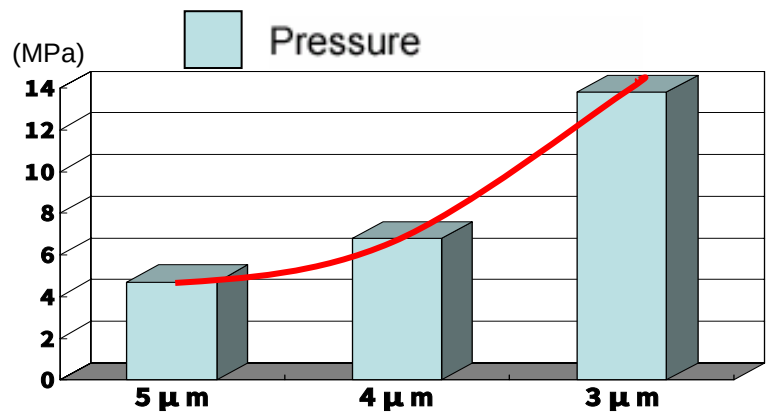

The pressure is inversely proportional to the square of the particle sizes

3 µm

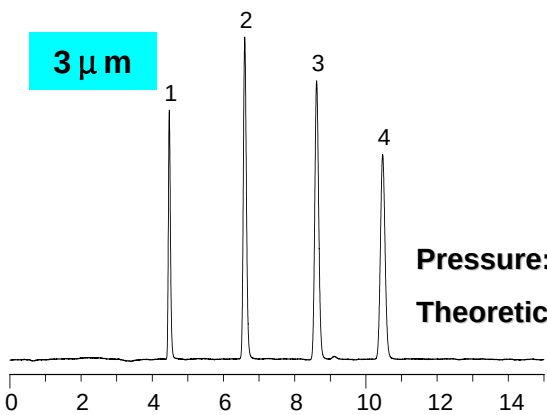

Pressure: 13.8 Mpa

Theoretical Plates: 30,484

GL Sciences

Low Pressure & High Theoretical Plate Numbers
HPLC Column

Inertsil® ODS-3 4 µm

Performance comparison between various particle sizes

4.6 x 50mm

Column Size:	4.6 x 50mm
Mobile Phase:	Acetonitrile/Water = 75/25
Flow Rate:	1.0mL/min
Sample:	1. Ethylbenzene
	2. Propylbenzene
	3. Butylbenzene
	4. tert-Amylbenzene
	5. n-Amylbenzene

I want to improve the quantitative precision!
I want to improve the peak height.

I want to save labor for sample preparation!
The column gets clogged because of the sample matrix!

5 µm → ***Your Solution!!!*** → **4 µm** ← ***Your Solution!!!*** ← **3 µm**

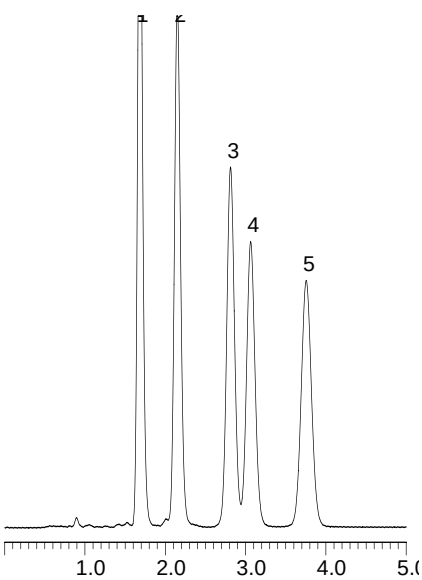

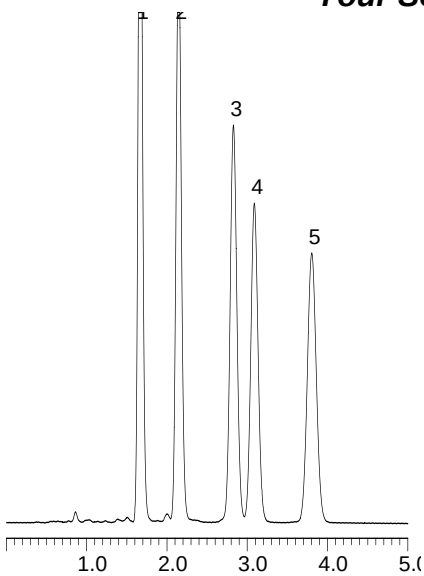

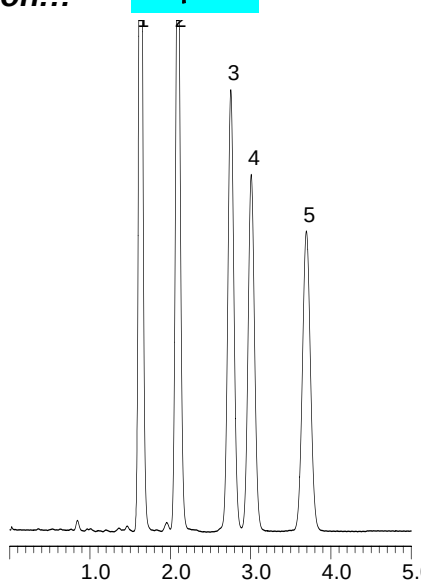

Pressure: 4.7 Mpa	**Pressure: 6.8 Mpa**	**Pressure: 13.8 Mpa**
Theoretical Plates: 23,512	**Theoretical Plates: 27,206**	**Theoretical Plates: 30,4841**

Simultaneous Analysis of 18 Artificial Colorant Compounds

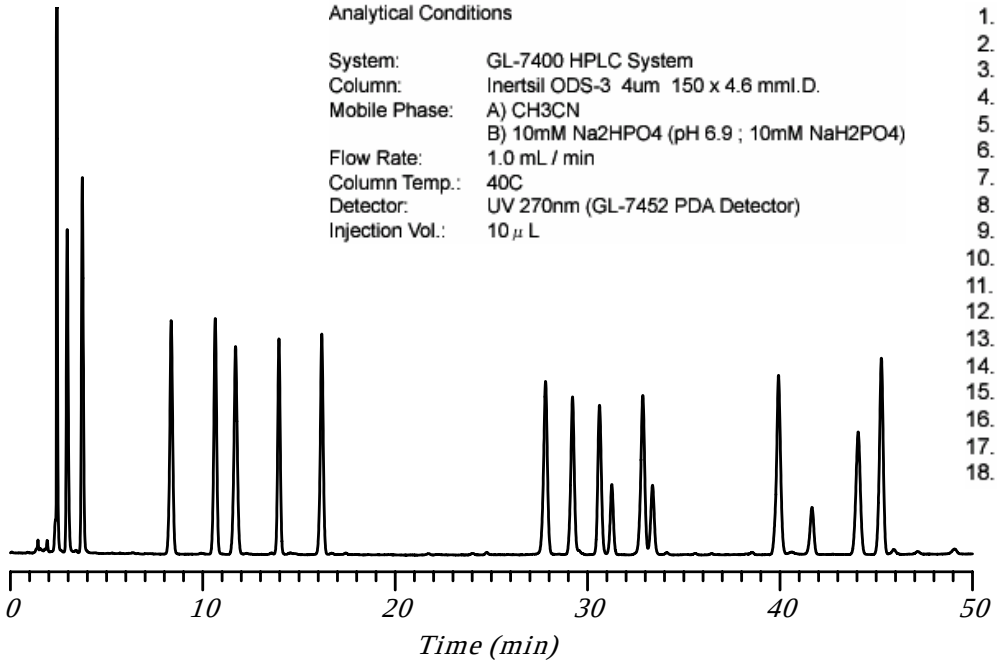

1.	Acid Yellow No.	7.6mg/L
2.	Acid Red No.2	3.8mg/L
3.	Acid Blue No.2	7.6mg/L
4.	Acid Red No.102	3.8mg/L
5.	Acid Yellow No.5	5.3mg/L
6.	Flavianic Acid Disodium Salt	7.6mg/L
7.	Uranine	3.8mg/L
8.	Acid Red No.40	5.3mg/L
9.	Ponceau R	7.6mg/L
10.	Ponceau SX	5.3mg/L
11.	Orange I	5.3mg/L
12.	Acid Green No.3	3.0mg/L
13.	Acid Blue No.1	3.0mg/L
14.	Ponceau 3R	7.6mg/L
15.	Acid Red No.3	5.3mg/L
16.	Azul Blue VX	3.0mg/L
17.	Orange II	7.6mg/L
18.	Acid Red No.106	3.0mg/L

Base Silica Physical Properties and Chemical Modification

Particle Size:	4um	Pore Volume:	1.05mL/g
Particle Shape:	Spherical	Bonded Phase:	Octadecyl Groups
Specification Surface Area:	450m2/g	Endcapped:	Yes
Pore Size:	100A	Carbon Load:	15%
		USP L1 Column	

Analytical Column Price List

I.D.(mm)	2.1	3.0	4.0	4.6
Length(mm)	Cat.No.	Cat.No.	Cat.No.	Cat.No.
33	5020-04611	5020-04621	5020-04631	5020-04641
50	5020-04612	5020-04622	5020-04632	5020-04642
75	5020-04613	5020-04623	5020-04633	5020-04643
100	5020-04614	5020-04624	5020-04634	5020-04644
150	5020-04615	5020-04625	5020-04635	5020-04645
250	5020-04616	5020-04626	5020-04636	5020-04646

＊End-fitting is Waters 1/16" type. When using other end-fitting types, please specify the type.
＊For other column sizes, please give us an enquiry. (Upon request)

Cartridge Guard Column E Price List

Cartridge Guard Column E			Cartridge Guard Column E (2EA. / Set)	Cartridge Guard Column E Holder Set (2 Cartridges & 1 Holder)
Analytical Column I.D.mm Size	Guard Column I.D.mm Size	Guard Column Length mm Size	Cat.No.	Cat.No.
2.1 mm	3.0 mm	10 mm	5020-08515	5020-08525
3.0 mm		20 mm	5020-08565	5020-08575
4.0 mm	4.0 mm	10 mm	5020-08510	5020-08520
4.6 mm		20 mm	5020-08560	5020-08570

＊ When ordering, please specify the packing material and the particle size.
＊ Only Waters 1/16" end-fitting type is compatible for our Cartridge Guard Column E.
＊ Conventional Guard Columns and GL-Cart Guard Columns are also available. For more information, please feel free to contact us.

●The specification and the column type are subject to change without notice due to continual improvements.
●All brand names and product names are trademarks or registered trademarks of GL Sciences Inc.
●TM or ® are not described in this brochure.